PERFORMANCE SPEC SHEET

5.50" 7/8 8.3 Fixed

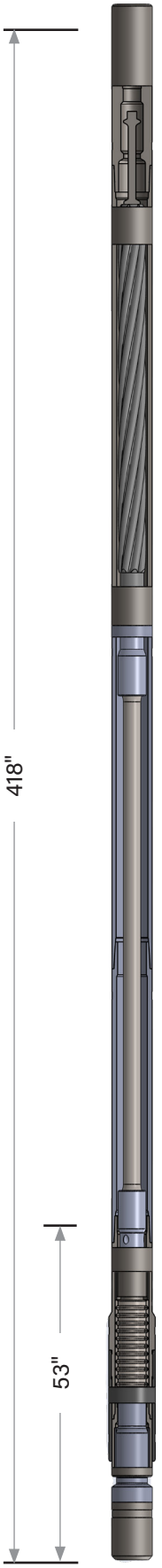

PHYSICAL DATA

Bit To Bend (in.)	53	Top Sub Connection	3 1/2 IF, XT-39
Overall Length (in.)	418	Bit Box Connection	3 1/2 REG, NC-40
Weight (lbs)	1900	Stator Length	280
		Rotor Length	275

POWER SECTION

Flow Range	200 to 400 GPM	Stall Diff. Press. (psi)	2620
RPG	0.48 rev / gal	Stall Torque (ft-lb)	12550
Speed Range	100 to 190 RPM	Max Recommended (HP)	830
Max Diff Press. (psi)	1960		
Max. Torque (ft-lb)	9370		

POWER SECTIONS POWER CURVES

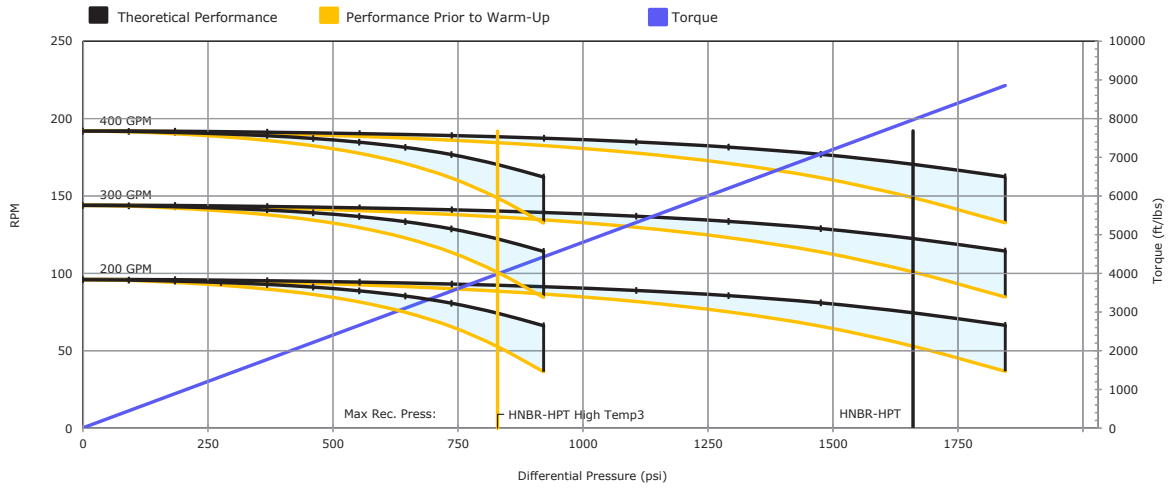

PERFORMANCE SPEC SHEET

5.50" 7/8 8.3 Fixed
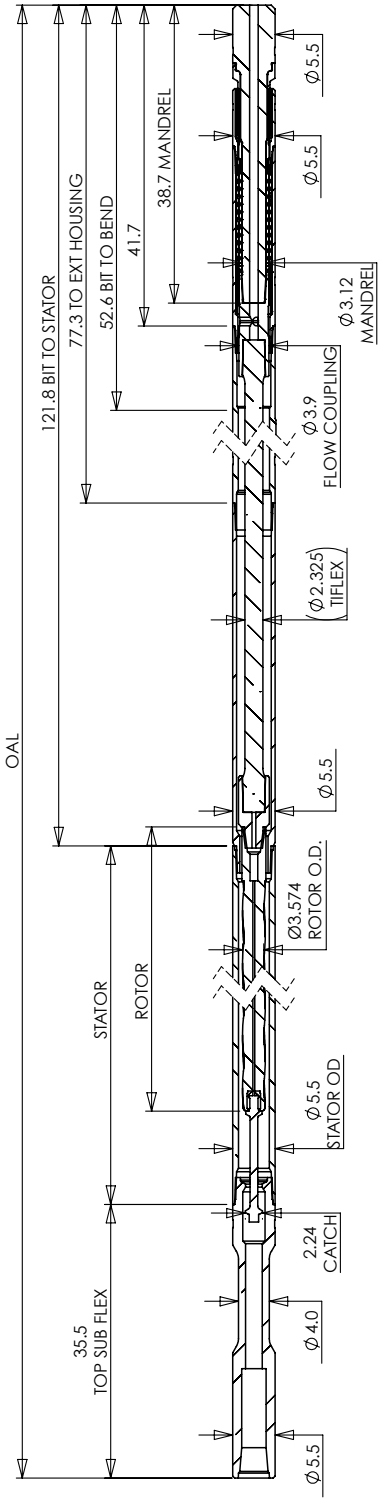
TIFLEX